Choosing and Using Guide Bushings

A simple explanation of how guide bushings work, and why I pretty much only use two.

Guide bushings are an excellent option for routing complex parts using a template, but many new users are not quite sure how to best use them. I don't have room here for a full tutorial, but I have learned a couple of things to help get you started off right.

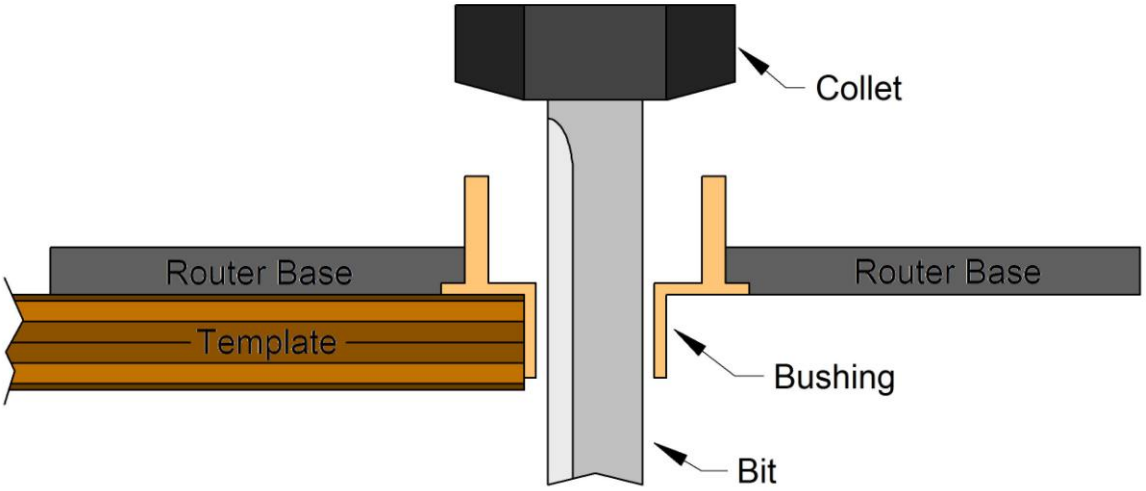

As shown in the diagram above, the guide bushing acts like the bearing on a flush trim bit, guiding it around your template. But unlike a bearing, the bushing surrounds the bit leaving it free to make partial and/or plunge cuts.

To do this, the bushing must be a bigger diameter than the bit, which leaves an 'offset' from the template to the cut line. To determine this offset, simply subtract the bit diameter from the bushing diameter and divide the answer by 2. ***(3/4" Bushing – 1/2" bit /2 = 1/8" offset in the diagram above)***

You can buy guide bushings individually or in a set of common sizes. Either is OK. You can often buy a set for not much more money than a couple of individual bushings.

I have found that I use the 3/4" or 1/2” bushings almost exclusively. Since most of my template work is done with the 1/2" or 1/4" bits, these bushings both create a 1/8” offset. I no longer need to remember which bit/bushing combination a template was created for; they both give the same results since they have the same offset. I create all my templates with the 1/8” offset so that both bushing/bit combinations work with it.